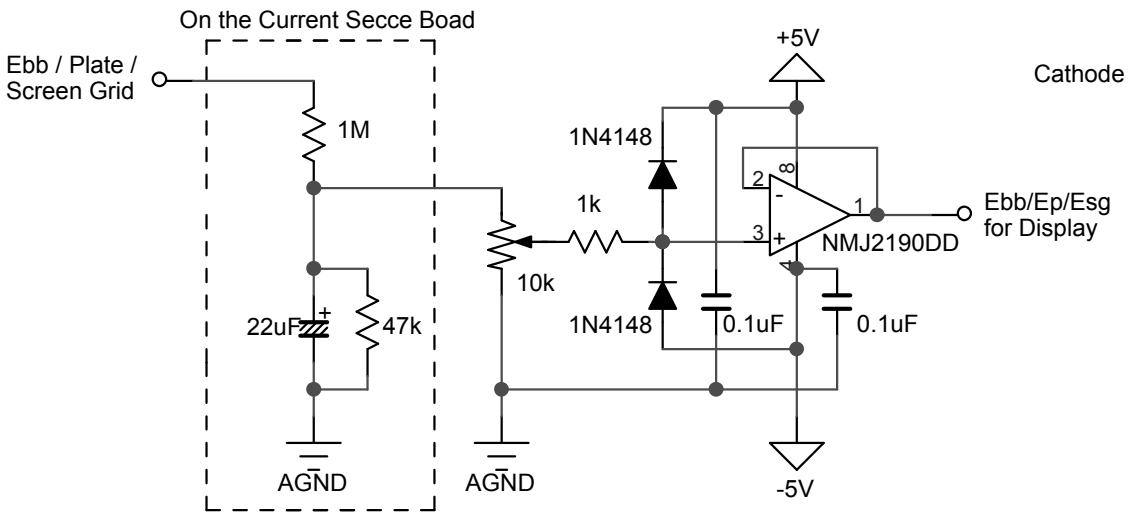

Buffer Type 1 for High Voltage (5 ea.)

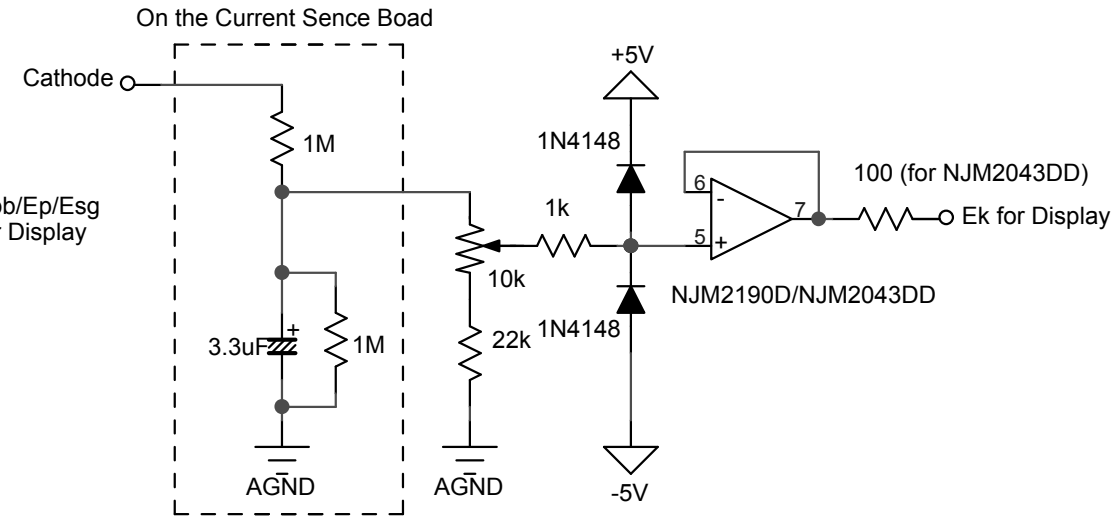

Buffer Type 2 for Mid Voltage (2 ea.)

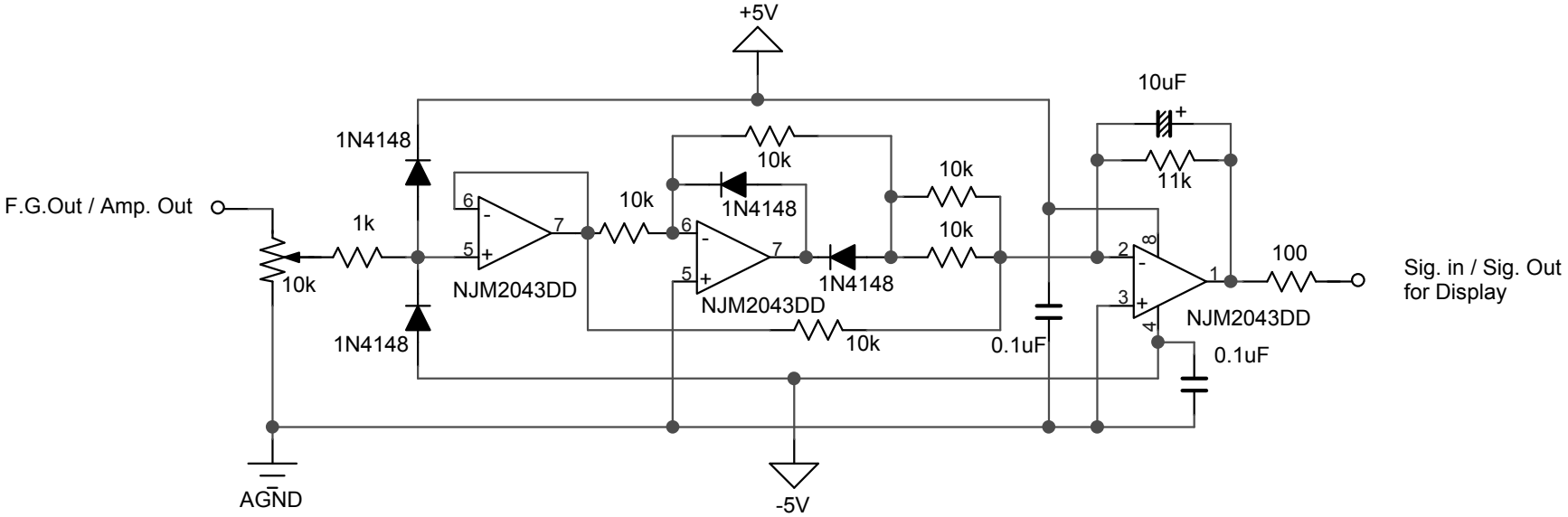

R.M.S Amp. for Signals (3 ea.)

4ch. Nixie DMM, Voltage Signal Conditioner 2010.8.9 A.Sakai

2011.12.3 Rev.A